Fast. Flexible. Simple. Now.
快。灵活。很简单。现在。

Innovations in Thin Film Electronics for the New Generation of Displays
新一代显示器的薄膜电子技术创新

ICDT2023 April 2023

jbrewer@amorphyx.com

Summary of Accomplishments

Demonstrated first example of IGZO-based TFT with LTPS TFT performance:
μFE > 70 and < 1V V(TH) bias stress shift operating in typical OLED/microLED pixel

演示了第一个基于IGZO的TFT与LTPS TFT性能的示例：

μFE>70和<1V(TH)的偏置应力在典型的OLED/microLED像素中移动

a-Silicon **device physics extended to define bulk accumulation mechanisms for IGZO AMeTFT performance**

a-Silicon器件物理扩展以定义IGZO AMeTFT性能的体积累机制

Analytics-based linkage between film/processing parameters and device electrical performance

基于分析的薄膜/加工参数与器件电性能之间的联动

OLED/microLED proof-of-concept pixel circuits - **0.1-240Hz variable image refresh rate, scalable from smartphones to TVs** incorporating materials system, processing fully compatible with flexible substrates

OLED/microLED概念验证像素电路 — 0.1-240Hz可变图像刷新率，可从智能手机扩展至采用材料系统的电视，处理与柔性衬底完全兼容

Amorphyx
Simple. For a Change.

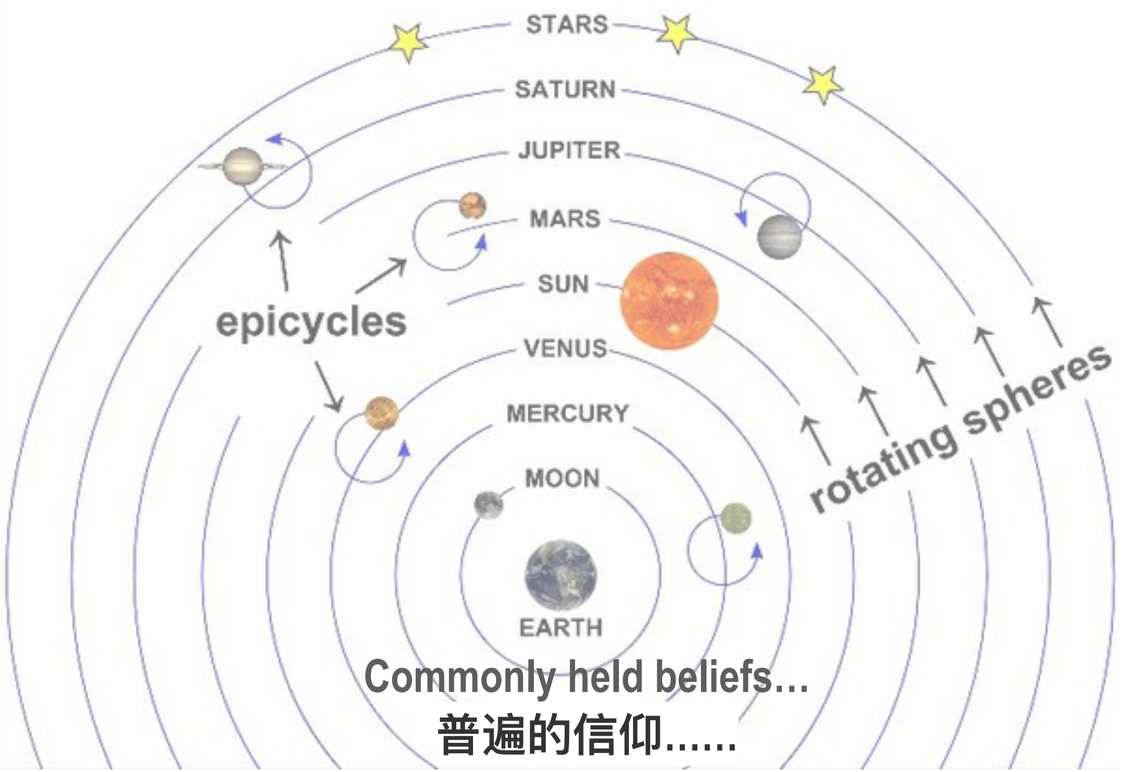

Commonly held beliefs…
普遍的信仰……

Metal oxide TFT field effect mobility is limited to approximately the intrinsic band mobility of the semiconductor
金属氧化物TFT场效应迁移率被近似地限制为半导体的本征带迁移率

The most promising path to increasing metal oxide TFT field effect mobility is increasing the band mobility of the semiconductor
提高金属氧化物TFT场效应迁移率的最有希望途径是增加半导体的能带迁移率

What Amorphyx has learned…
Amorphyx 学到的是……

The most promising path to increasing metal oxide TFT field effect mobility is **maximizing the metal oxide thickness at which bulk accumulation can be realized**
提高金属氧化物TFT场效应迁移率的最有希望的途径是使金属氧化物厚度最大化，在该厚度处可以实现体积聚

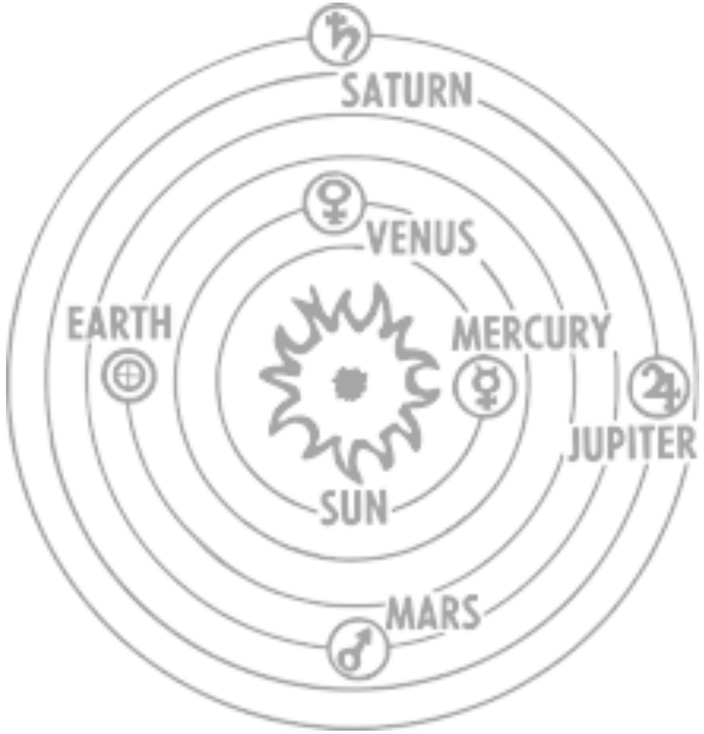

Amorphyx
Simple. For a Change.

Bulk Accumulation:
Maximizing Metal Oxide TFT Performance
批量累积：
最大化金属氧化物TFT性能

Amorphyx
Simple. For a Change.

Potential Energy 势能

Kinetic Energy 动能

2 waterfalls from narrow streams 狭窄溪流中的2个瀑布

Very different amounts of energy at bottom of falls 瀑布底部的能量差异很大

Why? The large difference in the distance the water travels equates to a large difference in the amount of potential energy converted to kinetic energy

为什么？水行进距离的大差等于转换为动能的势能数量的大差

Amorphyx
Simple. For a Change.

Typical Display Industry IGZO TFT

典型显示行业 IGZO TFT

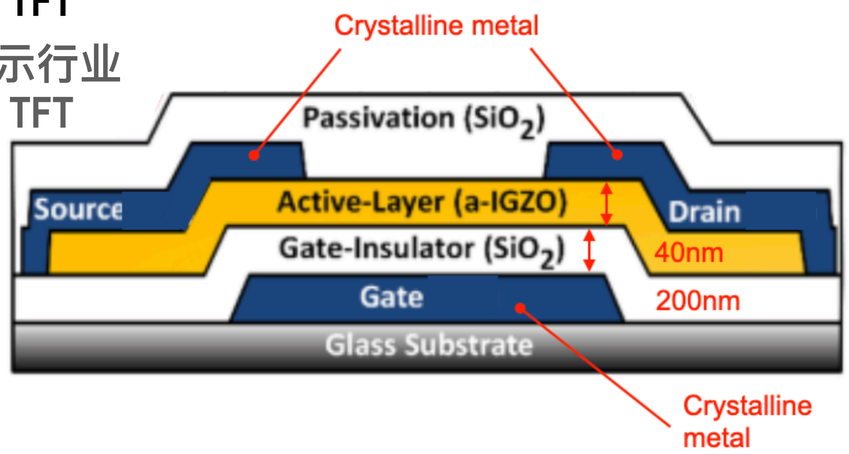

μ(FE) = 20 cm²/V-s **20V/3600sec/60°C PBTIS < 0.5V**

Amorphyx IGZO AMeTFT

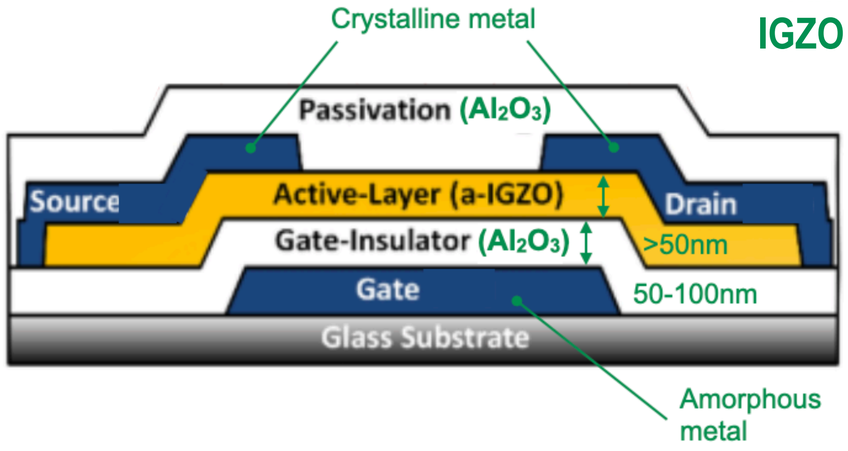

μ(FE) = 75 cm²/V-s **20V/3600sec/60°C PBTIS < 0.5V**

2 IGZO TFTs: same IGZO semiconductor materials, different abilities to store energy in gate

2个IGZO TFTs：相同的IGZO半导体材料，不同的能量存储能力

Very different "waterfall heights" ∴ very different field effect mobilities

Why? The large difference in volume of IGZO contributing to I(DS), driven by the large difference in energy stored in the gate

为什么？IGZO的体积差异对I(DS)的贡献很大，这是由于栅中存储的能量差异很大

Potential Energy

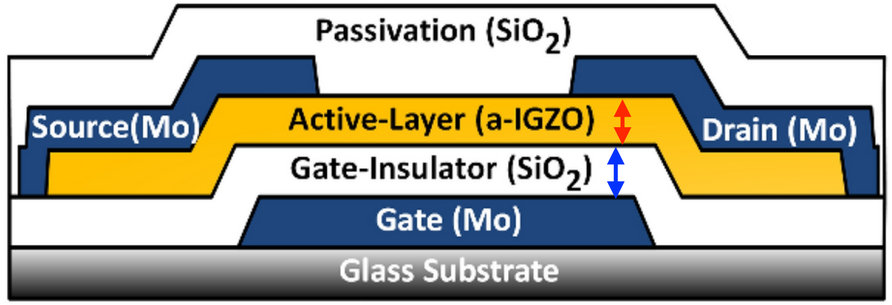

Energy stored in gate = "Height of the Waterfall"

闸门储存能量= "瀑布高度"

Amorphyx Simple. For a Change.

Maximizing the conversion of IGZO's potential energy into I(DS) is the result of the energy stored in the gate capacitance

最大限度的将IGZO的势能转化为I(DS)是存储在栅电容中的能量的结果

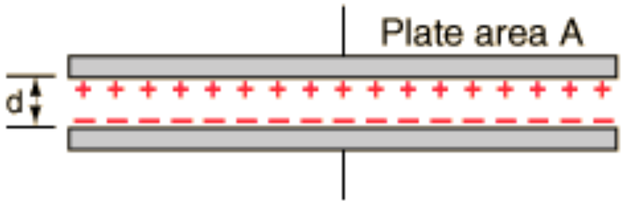

$$C = \frac{\varepsilon A}{d} = \frac{k\varepsilon_0 A}{d}$$

Potential Energy $U = \frac{1}{2}CV^2$

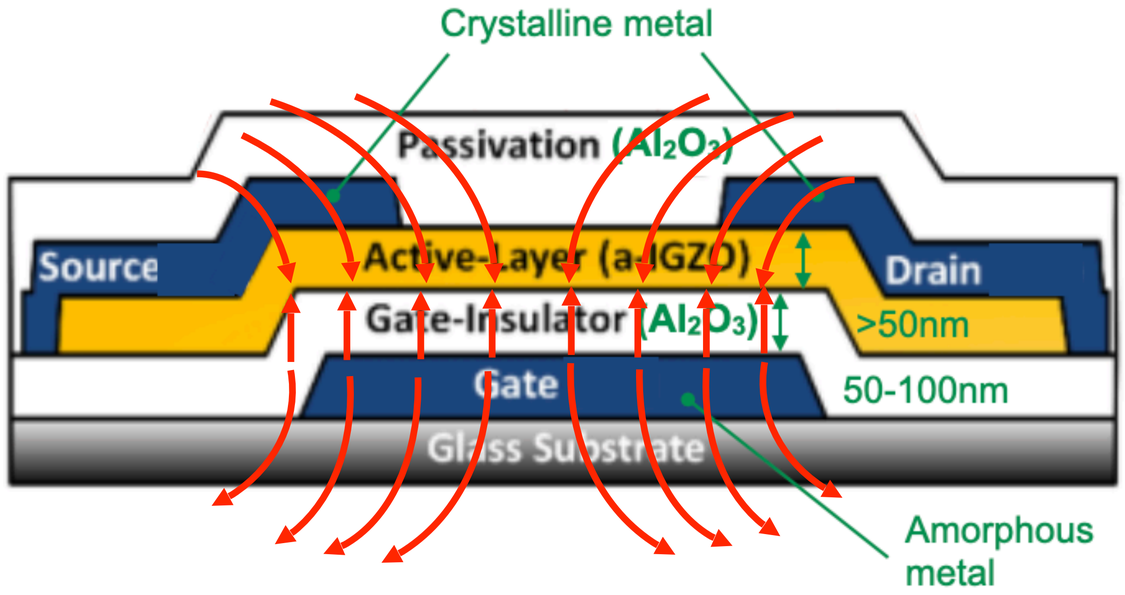

The gate capacitance electric field induces a surface potential on the IGZO material

栅极电容电场在IGZO材料上感应表面电势

Carrier concentration increases exponentially with increasing surface potential

载流子浓度随表面势的增加而指数增加

Amorphous gate metal smoothness **ensures highly uniform charge distribution throughout gate insulator** - maximizing the insulator's breakdown strength

非晶态栅极金属的平滑性确保整个栅极绝缘体的高度均匀的电荷分布 — 使绝缘体的击穿强度最大化

Amorphyx
Simple. For a Change.

Lee and Nathan, "Conduction Threshold in Accumulation-Mode InGaZnO Thin Film Transistors", *Nature Scientific Reports, 6-22567*, Electrical Engineering Division, Department of Engineering, University of Cambridge, 2 March 2016.

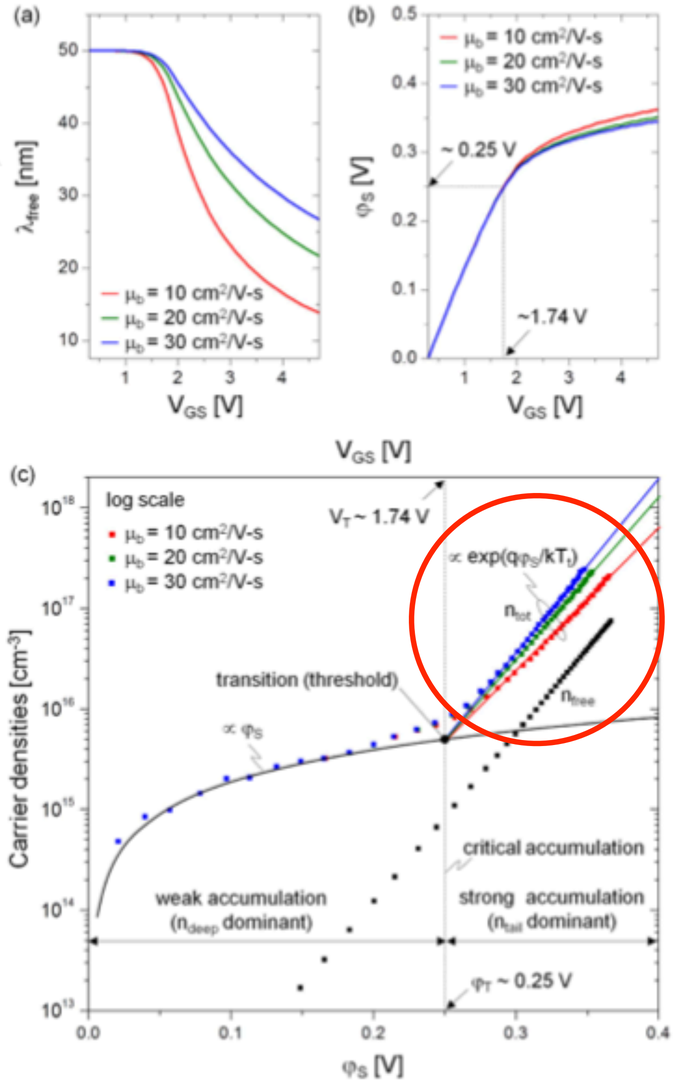

Figure 2. (a) Effective thickness of induced free carrier sheet (λ_{free}) vs. V_{GS}. (b) Surface potential (φ_S) as a function of V_{GS} and (c) total induced carrier density (n_{tot}) and n_{free} as a function of φ_S for different μ_b values of 10, 20, and 30 cm²/V-s, respectively.

"…χ_{TLC} (the ratio of free carrier density to total carrier density) shows a similarity with the first derivative of the current-voltage characteristics, $\partial I_{DS}/\partial V_{GS}$ (=g_m), the transconductance of the transistor, which in turn is proportional to the field effect mobility (μ_{FE}).

Thus, μ_{FE} is proportional to χ_{TLC}."

Gate electric field strength defines surface potential - ∴ g_m , ∴ μ_{FE}

Gate electric field strength is defined by the gate capacitance

For any bulk mobility (μ_b), the **ratio of free carrier density to total carrier density transitions from linear to exponential with respect to surface potential** above threshold voltage

对于任何体迁移率(μb)，自由载流子密度与总载流子密度的比值与高于阈值电压的表面电势之比从线性变化到指数变化

Improving IGZO TFT μ_{FE} through increasing gate electric field strength **applies to any IGZO material**

Amorphyx
Simple. For a Change.

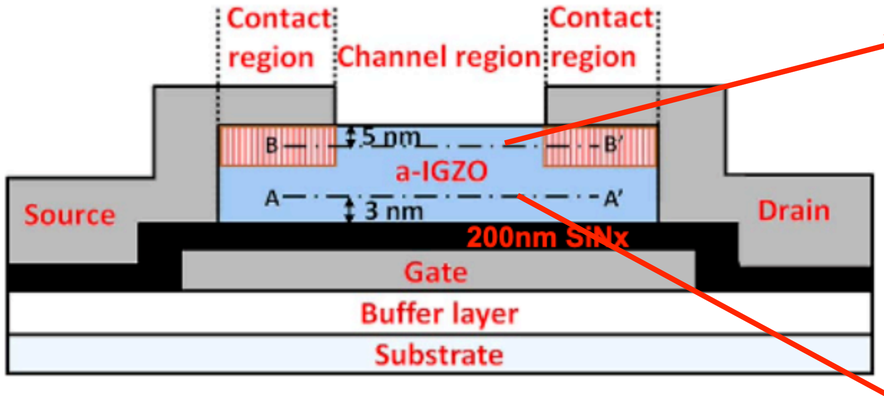

(a) Typical BGTC IGZO TFT structure

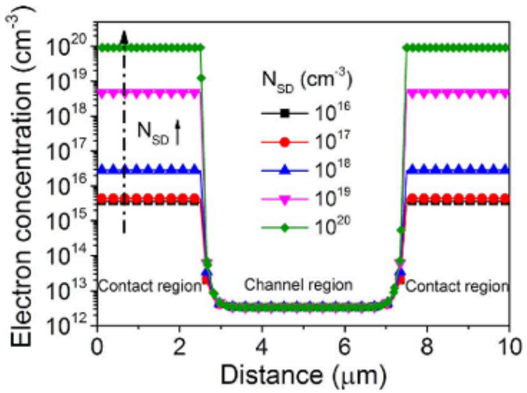

(b) Carrier concentration at B-B' cross section

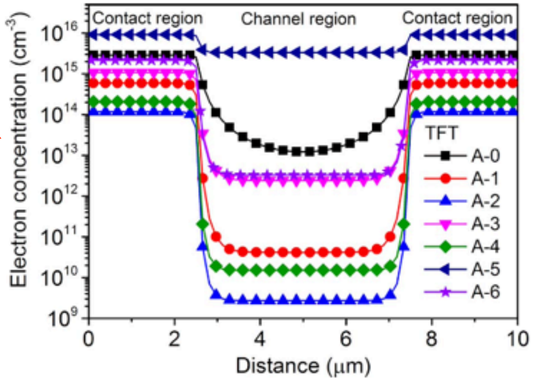

(c) Carrier concentration at A-A' cross section

In a typical display industry TFT structure, only **a fraction of the available IGZO semiconductor potential energy is converted to kinetic energy - I(DS)**

在典型的显示工业TFT结构中，只有一部分可用的IGZO半导体势能被转化为动能 — I(DS)

Amorphyx
Simple. For a Change.

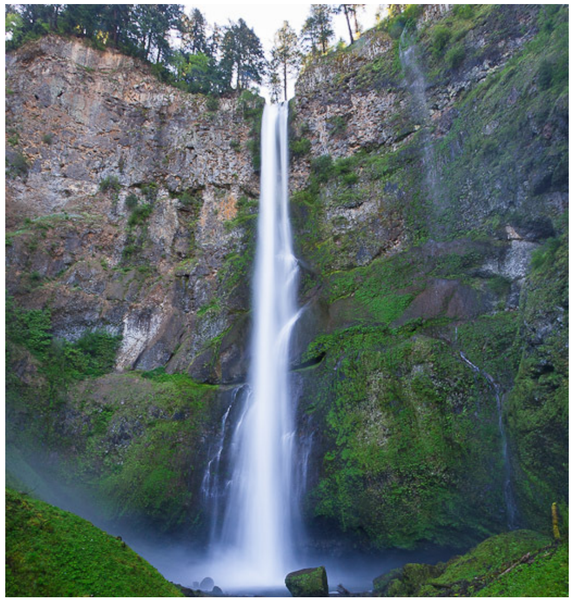

In IGZO AMeTFT structure, **nearly all of potential energy in the IGZO semiconductor is converted to kinetic energy - I(DS)**

在IGZO AMeTFT结构中，几乎所有IGZO半导体中的势能都转化为动能 — I(DS)

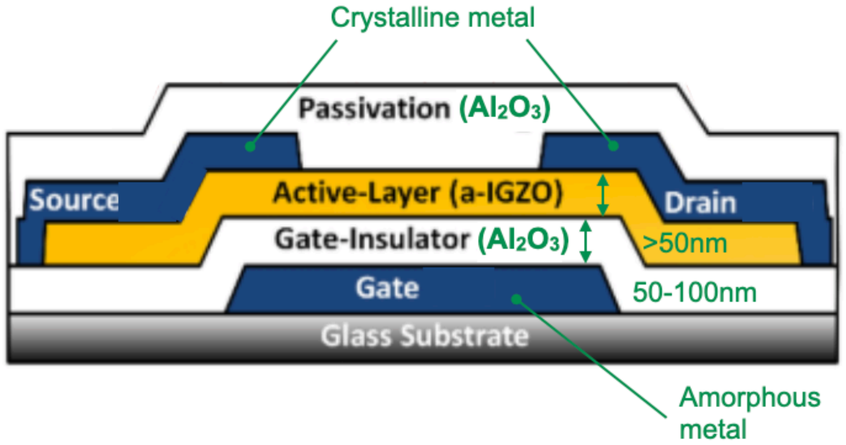

Amorphyx BGTC IGZO Amorphous Metal TFT structure and films

BGTC IGZO AMeTFT
W/L = 9/9 µm

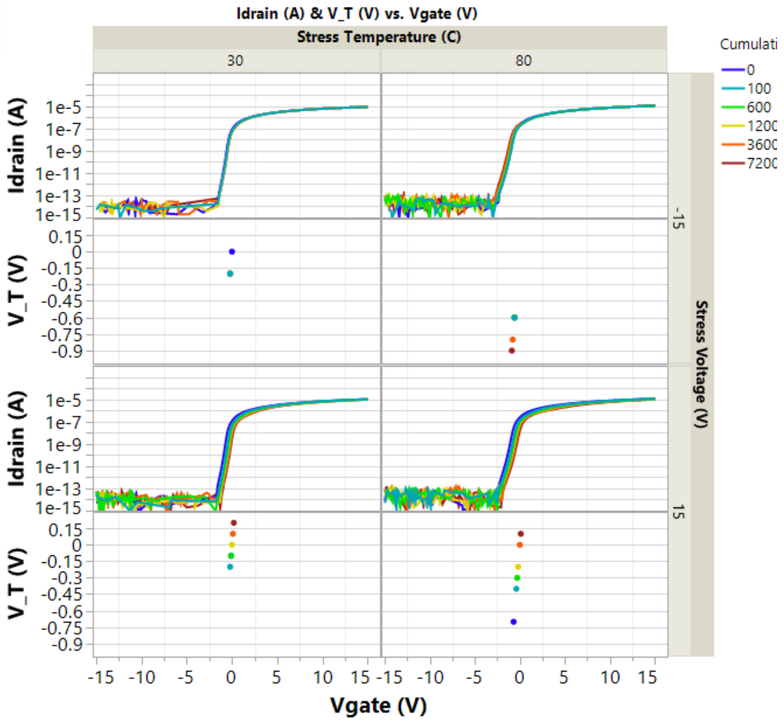

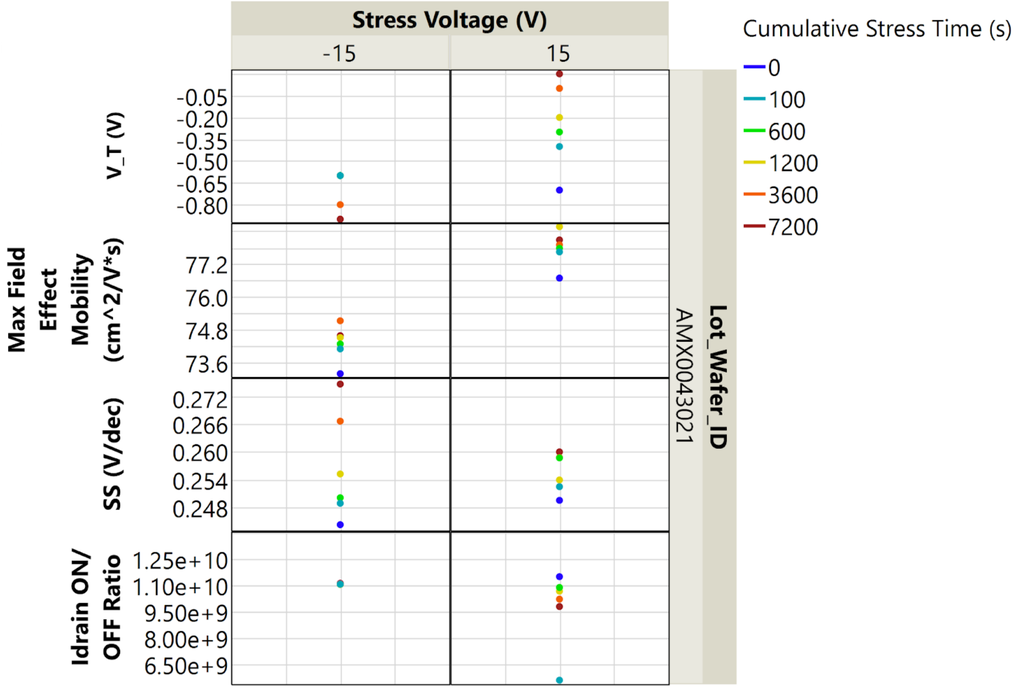

ICDT 2023

Amorphyx
Simple. For a Change.

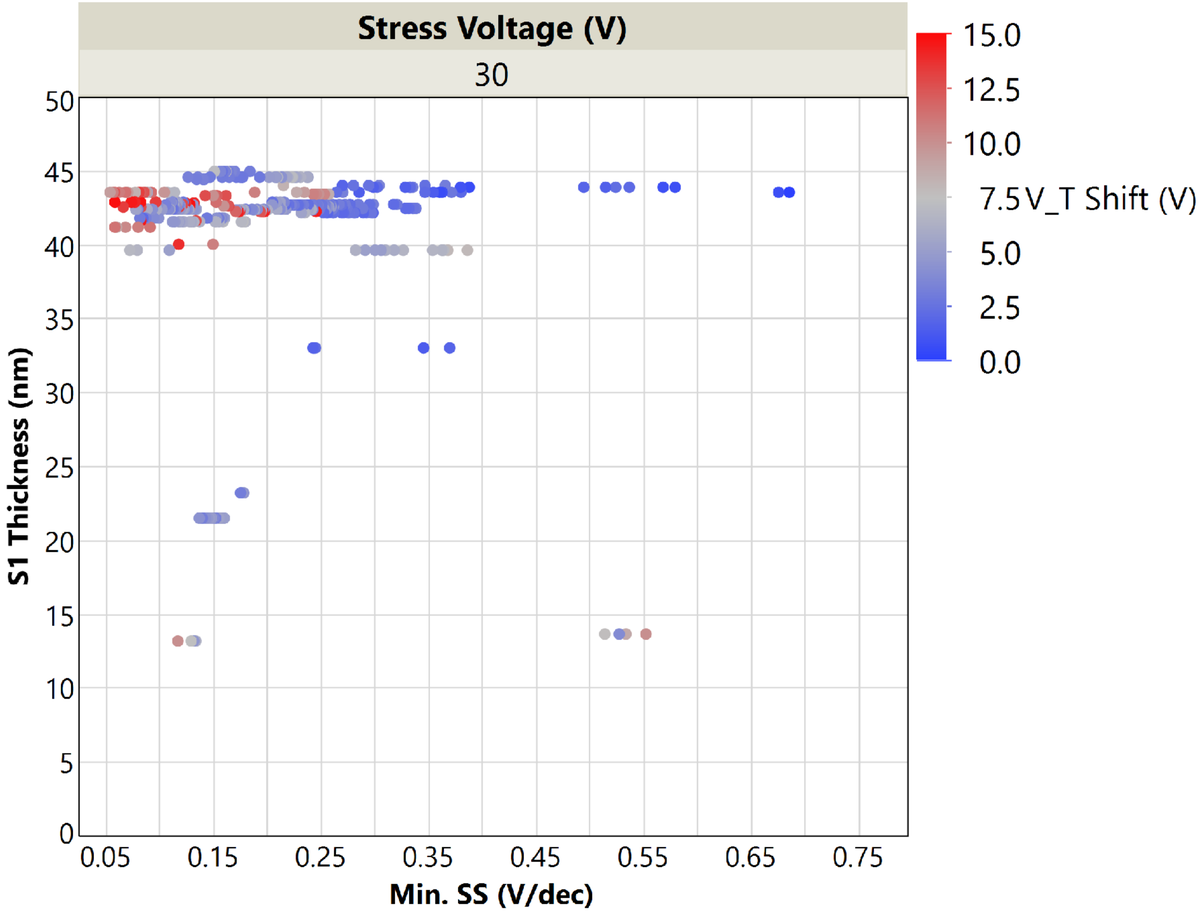

Data from over 250 multiple-wafer development lots shows no dependency for SS or PBTS performance on IGZO thickness. This creates a **degree of freedom for increasing field effect mobility unique to IGZO AMeTFT - increasing IGZO thickness.** 来自超过250个多晶片开发批次的数据表明，SS或PBTS性能与IGZO厚度没有依赖关系。 这创造了一种自由度，用于增加IGZO AMeTFT — 增加IGZO厚度所特有的场效应迁移率。

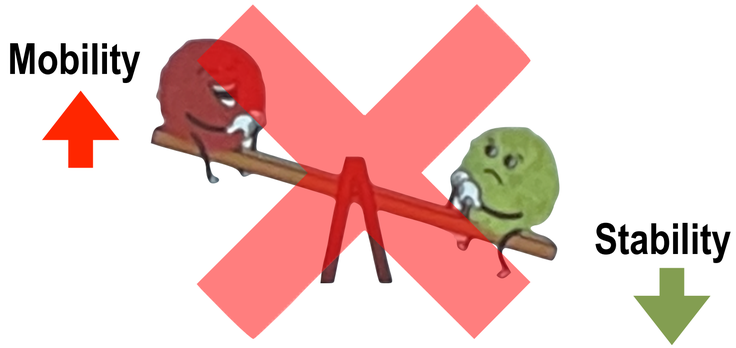

An increase in subthreshold swing is the result of a reduction in gate control, and can be achieved using any of the following:
亚阈值摆动的增加是栅极控制减少的结果，并且可以使用以下任何一种方法来实现：

- ~~Reducing gate oxide capacitance~~
- Increasing IGZO thickness
- ~~Increasing the doping of the semiconductor (e.g., reducing O_2 content)~~

without compromising operating bias stress performance 在不影响操作偏置应力性能的情况下

Amorphyx
Simple. For a Change.

Order-of-magnitude increase in gate energy storage capacity

栅储能容量的数量级增加

+

Uniform charge density throughout gate insulator

栅极绝缘体中的均匀电荷密度

=

LTPS TFT μ(FE) from IGZO TFT with all the low leakage current benefits of IGZO TFTs

IGZO TFT 的LTPS TFT μ(FE)具有IGZO TFT的所有低漏电流优势

Increasing gate insulator dielectric constant **increases energy storage capacity**

增加栅极绝缘体的介电常数增加储能容量

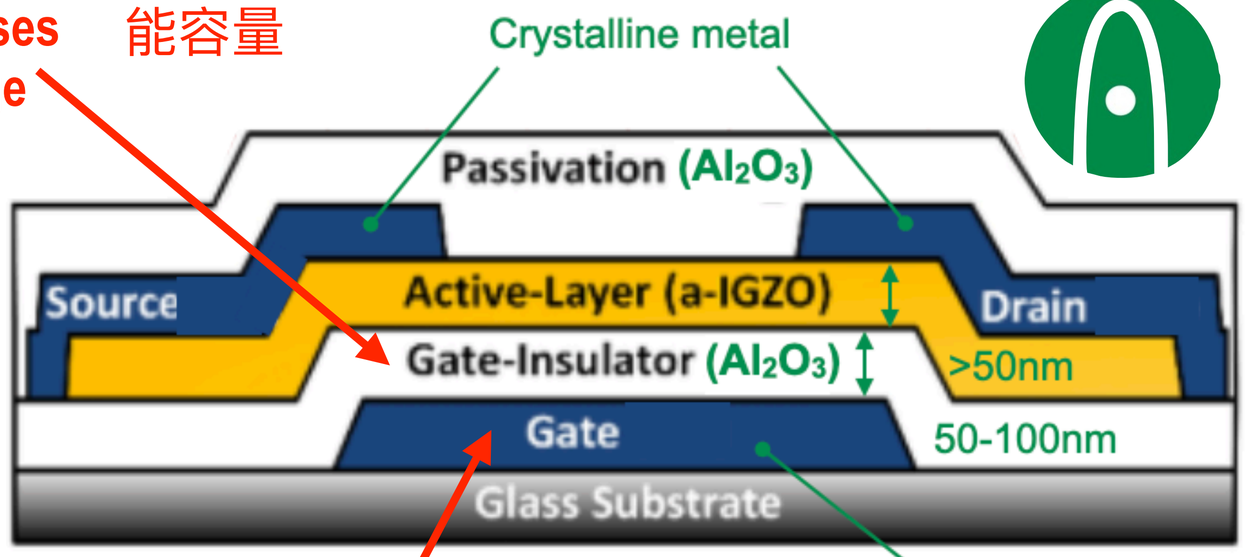

Smooth amorphous metal ensures uniform charge density across gate insulator, **maximizing film breakdown strength and minimizing insulator thickness**

平滑的非晶金属确保栅极绝缘体上的电荷密度均匀，使薄膜击穿强度最大化和绝缘体厚度最小化

Amorphyx
Simple. For a Change.

IGZO AMeTFT Development Strategy

IGZO AMeTFT发展战略

- **optimize smoothness** of amorphous Gate Metal to enable reductions in Gate Insulator thickness

  优化非晶栅极金属的平滑性以减小栅极绝缘体厚度

- **maximize IGZO thickness** to optimize benefits of higher gate capacitance energy

  最大化IGZO厚度以优化更高栅极电容能量的好处

Increasing gate insulator dielectric constant **increases energy storage capacity**

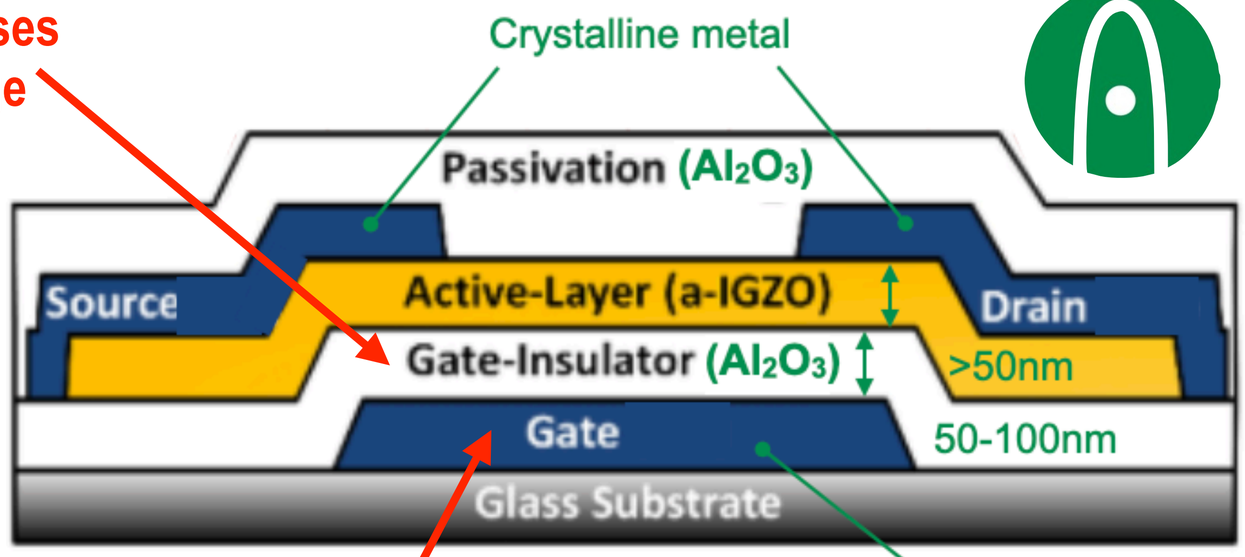

Smooth amorphous metal ensures uniform charge density across gate insulator, **maximizing film breakdown strength**

Amorphyx
Simple. For a Change.

IGZO AMeTFT Device, 2T1C Pixel Performance
IGZO AMeTFT设备，2T1C像素性能

Amorphyx
Simple. For a Change.

LTPS Performance, a-Silicon Simplicity

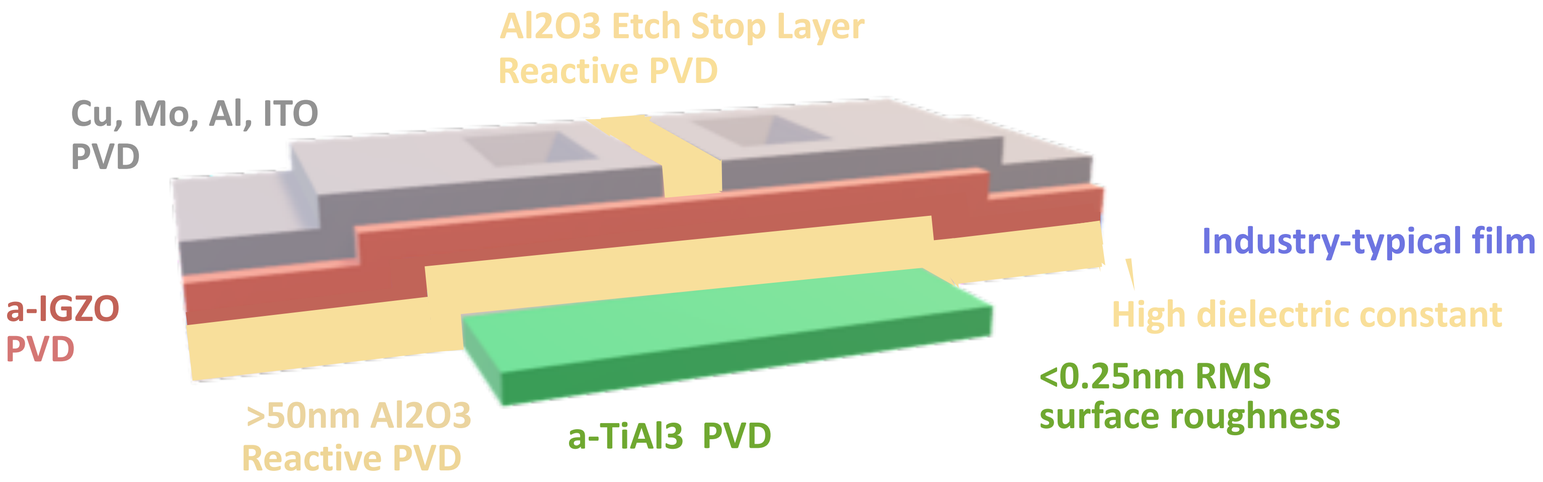

all-PVD processing 全物理层处理

Wet or Dry Etch 湿蚀刻或干蚀刻

Integrates into existing a-Silicon, IGZO TFT process flows
集成到现有的a-Silicon、IGZO TFT工艺流程中

Amorphyx
Simple. For a Change.

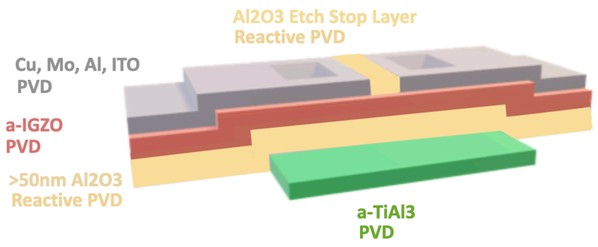

TFT Technology Comparison

Performance Specification	Symbol		SHARP LTPS TFT (W/L = 10/7.5μm)	SHARP "IGZO 7" TFT (W/L = 10/7.5μm)	LG Display IGZO TFT (W/L = 26/10μm)	Samsung Display IGZO TFT (W/L = 2.6/4μm)	CEC Panda IGZO TFT (W/L = 10/6μm)	IGZO AMeTFT (W/L = 9.0/9.0μm)	Goal	Units
Threshold Voltage	V(TH)		1.5	1.0	0	0.75	0	0	0	Volts
Drain-Source Current	I(DS)									
		V(GS) = 1V V(DS) = 0.1V		0.1	0.1	0.5	0.01	0.5		μAmps
		V(GS) = 5V V(DS) = 3V						75	100	μAmps
		V(GS) = 20V V(DS) = 10V	450	450	20	50	20			μAmps
Field Effect Electron Mobility	μ(FE)	V(GS) ≥ V(TH)	90	40		8	13	75	100	$cm^2/V\text{-}s$
On-Off Current Ratio	I(ON)//I(OFF)	V(ON) ≥ V(TH) V(OFF) = 0V	10^6	$>10^9$		$>10^9$		$>10^9$	$>10^9$	
Subthreshold Swing	SS		0.3	0.1				0.1	0.1	V/dec
Operating Stress	NBTS									
-10V Stress		-15≥V(GS)≥+15V V(DS) = 0.1V						(7200 sec 80°C) -0.25	(7200 sec 80°C) -0.25	Volts
-20V Stress		-15≥V(GS)≥+15V V(DS) = 0.1V				(3600 sec 60°C) -0.75		(7200 sec 80°C) -0.5	(7200 sec 80°C) -0.5	Volts
-30V Stress		-15≥V(GS)≥+15V V(DS) = 0.1V	(3600 sec, 60°C) -0.4	(3600 sec, 60°C) -0.4	(3600 sec, 60°C) -0.1		(7200 sec, 60°C) -0.4	(7200 sec 80°C) -0.5	(7200 sec 80°C) -0.5	Volts
	PBTS									
10V Stress		-15≥V(GS)≥+15V V(DS) = 0.1V						(7200 sec 80°C) 0.25	(7200 sec 80°C) 0.25	Volts
20V Stress		-15≥V(GS)≥+15V V(DS) = 0.1V				(3600 sec 60°C) 0.5		(7200 sec 80°C) 0.5	(7200 sec 80°C) 0.5	Volts

Sharp LTPS, IGZO 7 TFT data from "Development of High Quality IGZO-TFT with Same On-Current as LTPS", 2020 Society for Information Display International Symposium Digest of Technical Papers, September 2020.

Samsung Display data from "High Mobility Oxide Thin-film Transistors for AMOLED Displays", 2022 Society for Information Display Technical Symposium, May 2022.

Amorphyx
Simple. For a Change.

2T1C Pixel

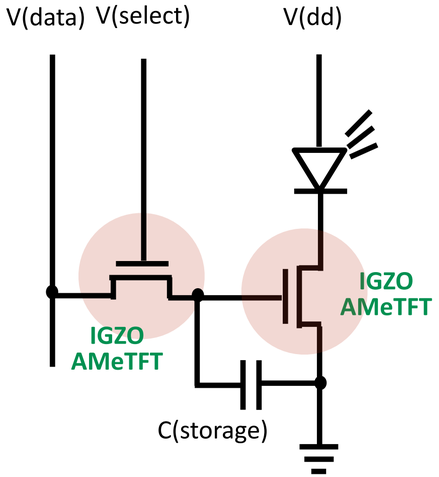

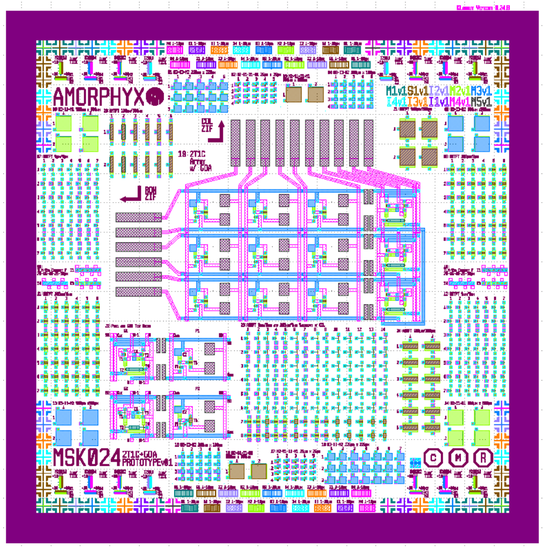

Enables high image refresh rate LCD, OLED, microLED large-area IT, TV panels

支持高图像刷新率的LCD、OLED、microLED大面积IT、电视面板

Eliminates LTPO (LTPS+IGZO) fabrication issues, mask set complexity

消除了LTPO (LTPS+IGZO)的制造问题和掩码集复杂性

Reducing IGZO TFT leakage current 降低IGZO TFT漏电流

- Reduces low-end image refresh rate 降低低端图像刷新率
- Similar mobility to LTPS 与LTPS类似的移动性
- Much better direct current stress performance 更好的直流应力性能
- Simplifies emitter drive portion of pixel 简化像素的发射器驱动部分

Amorphyx
Simple. For a Change.

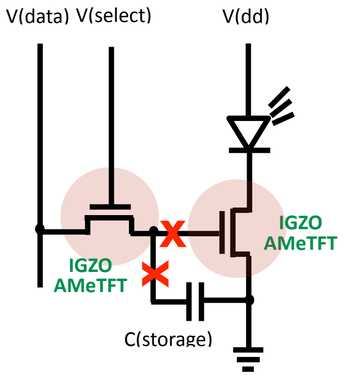

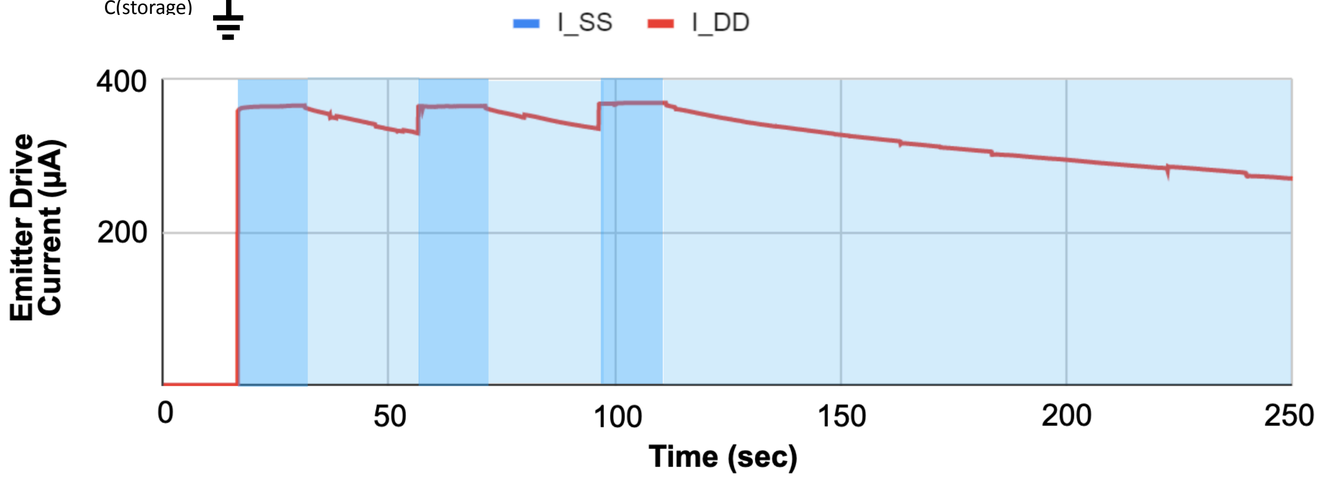

The 2T1C OLED drive current maintains performance at V(DATA) = 5V, demonstrating that the leakage current performance of 108x9 µm IGZO AMeTFT supports an image refresh rate of less than 1Hz. (Dark areas are pixel programming times, lighter areas are retention times.)
2T1C OLED驱动电流在V(DATA) = 5V时保持性能，表明108x9µm IGZO AMeTFT的漏电流性能支持小于1Hz的图像刷新率。（暗区域是像素编程时间，较亮区域是保留时间。）

The unique properties of oxide insulators like **Al_2O_3** Al2O3等氧化物绝缘子的独特性能

- high dielectric constant
- high breakdown
- high energy trap states

combined with ultra-smooth amorphous gate metals

results in **leakage currents far below those of SiOx, SiNx gate insulators**
漏电流远低于SiOx、SiNx栅绝缘体的漏电流

IGZO AMeTFT redefines variable image refresh rate performance
IGZO AMeTFT重新定义了可变图像刷新率性能

Amorphyx
Simple. For a Change.

2T1C vs LTPO Pixel

Source: Hong, et. al., “Advanced hybrid process with back contact IGZO-TFT”, **Sharp Corporation**, ***Journal of the Society of Information Display*. 2022**;30(5):471–481. https://doi.org/10.1002/jsid.1131

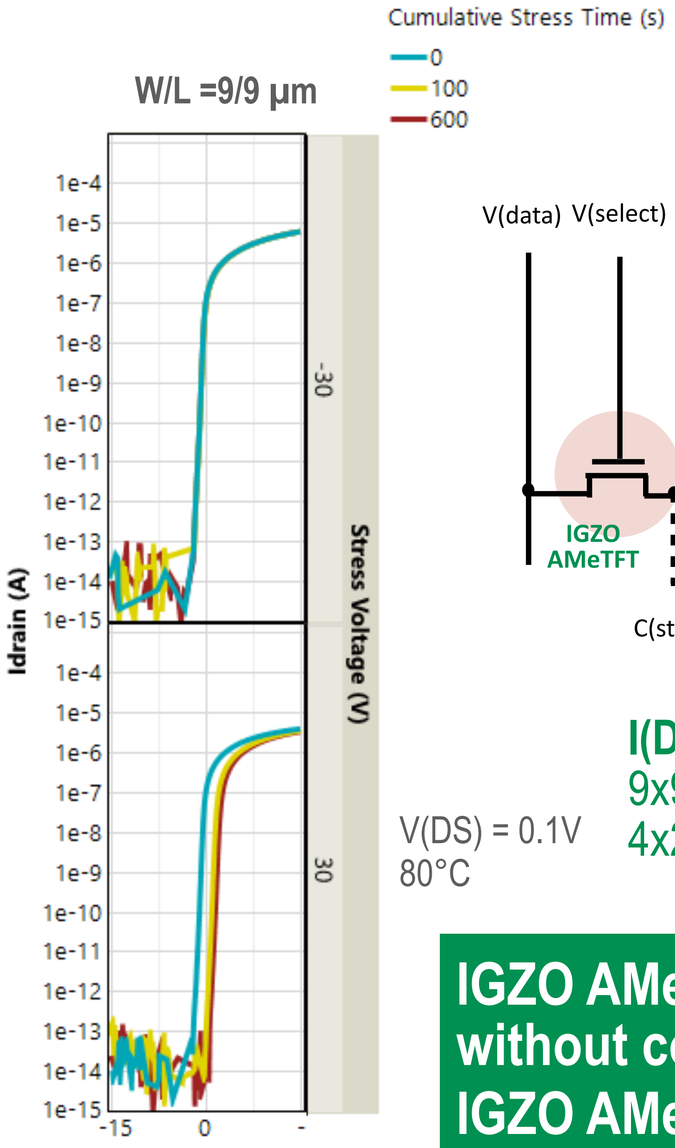

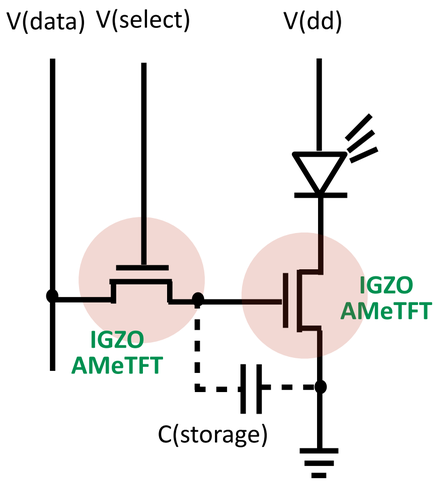

V(DS) = 0.1V
80°C

I(DS, sat) @ V(DS) = 0.1V
9x9µm IGZO AMeTFT: 9µA
4x24µm LTPS TFT: 0.9µA

IGZO AMeTFT reduces pixel area without compromising performance
IGZO AMeTFT在不影响性能的情况下减少了像素面积

	V_{th} (V)	σ of V_{th}	µ (cm^2/Vs)
IGZO pixel	0.75	0.14	7.6
IGZO GOA	1.26	0.10	-
p-LTPS pixel	−1.43	0.08	84.3

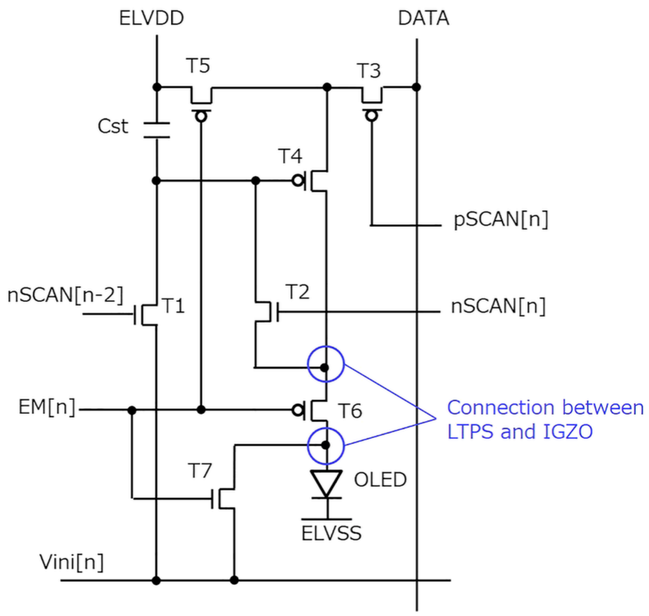

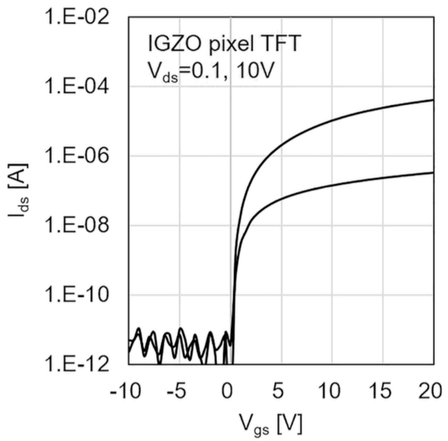

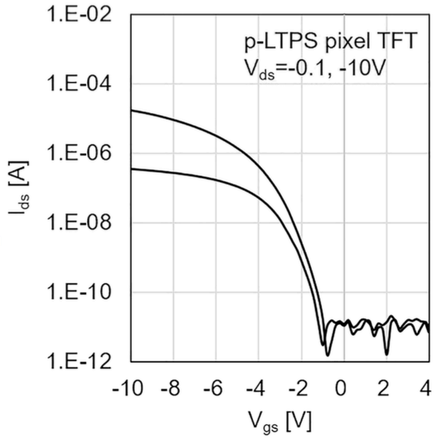

Amorphyx
Simple. For a Change.

Redefining Power Consumption

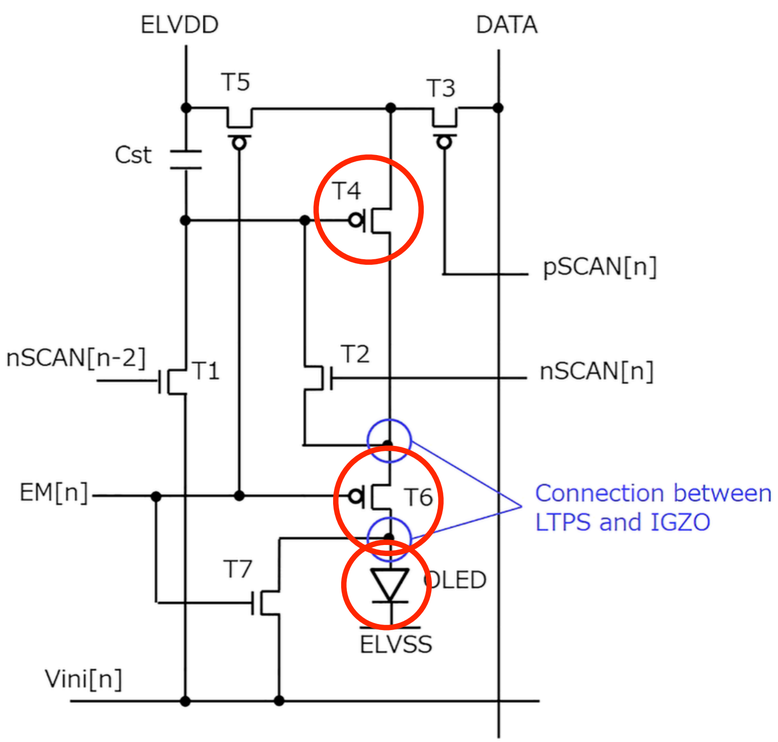

$V(DS)|_{T4} + V(DS)|_{T6} + V(OLED) > 3.6V$

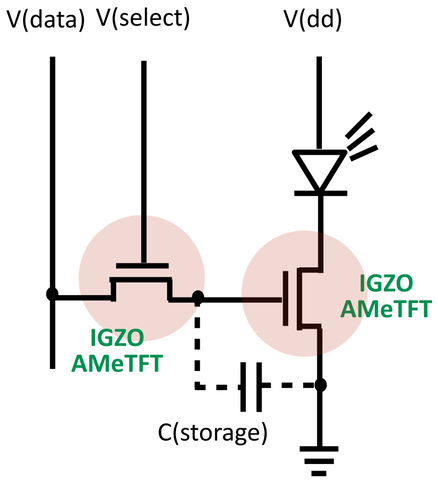

$V(DS) + V(OLED) \leq 3.6V$

Battery Voltage = 3.6V
Voltage Upconvert Efficiency = 90%
Display consumes 80% of battery energy

∴ Voltage Upconvert consumes 7.2% of battery energy

iPhone 14 battery life = 20 hrs

∴ **Display voltage upconversion wastes 90 min of battery life**
∴显示电压上转换浪费电池寿命90分钟

IGZO AMeTFT 2T1C Pixel saves 90 min of battery life - independent of image refresh rate
IGZO AMeTFT 2T1C像素节省90分钟的电池寿命 — 与图像刷新速率无关

Amorphyx
Simple. For a Change.

45 patents on Thin Film Device Fundamentals

45项关于薄膜器件基础的专利

- use of amorphous metals in thin film devices

  非晶态金属在薄膜器件中的用途

- circuits incorporating amorphous metal-based devices

  包含非晶态金属基器件的电路

US, PRC, ROC, ROK, Japan

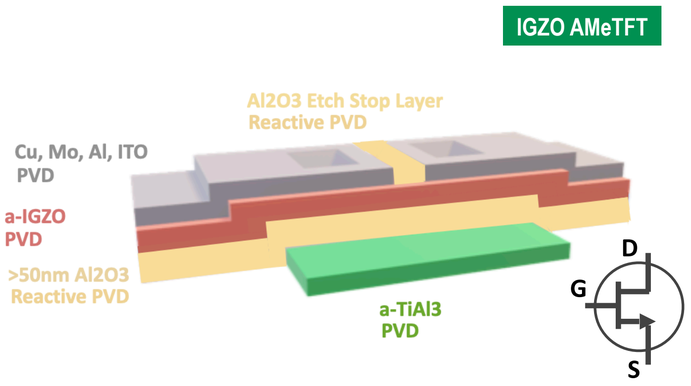

AMTeFT
US11183585 family:
"A device, comprising:
a non-conducting substrate;
an amorphous metal gate electrode on the non-conducting substrate, the amorphous metal gate electrode including a metal alloy; and
a first insulator on the amorphous metal gate electrode…

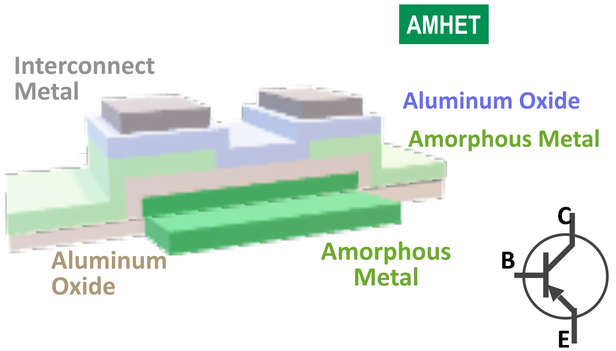

AMNR-X
US10438841 family:
"A device, comprising:
a substrate;
a first amorphous metal thin film interconnect on the substrate…

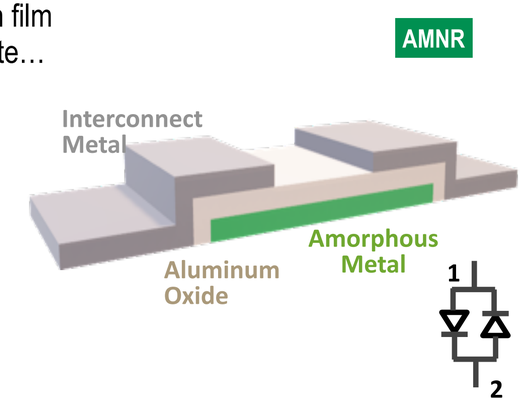

AMHET
US11069799 family:
"A device, comprising:
a substrate;
an amorphous metal layer on the substrate;
a tunneling dielectric layer on the amorphous metal layer;
a barrier layer on the tunneling dielectric layer;
a first electrode and a second electrode on the tunneling dielectric layer, each overlapping the amorphous metal layer…

Amorphyx
Simple. For a Change.

AMeTFT technology **enables IGZO to replace LTPS** in high-performance small-to-large area displays by increasing gate electric field energy to maximize free carrier density from any IGZO material

AMeTFT技术使IGZO能够通过增加栅极电场能量来最大化任何IGZO材料的自由载流子密度，从而在高性能的小到大面积显示器中取代LTPS

AMeTFT materials system **uniquely supports LTPS-equivalent μFE, PBTIS and NBTIS** performance from IGZO semiconductor

AMeTFT材料体系独特地支持来自IGZO半导体的LTPS等效μFE、PBTIS和NBTIS性能

Amorphyx has developed a set of **analytical tools incorporating all of the company's intellectual property** to enable successful technology transfer to customers

Amorphyx开发了一套分析工具，包含了公司的所有知识产权，从而能够成功地向客户转让技术

Amorphyx incorporates AMeTFT and AMNR technology into existing pixel circuits outperforming LTPO **supporting 0.1-240Hz variable small-area image refresh rate and scalable to UHD TV applications**

Amorphyx将AMeTFT和AMNR技术融入到现有的像素电路中，性能优于LTPO，支持0.1-240Hz可变小区域图像刷新率，并可扩展至超高清TV应用